PROPRIETARY RIGHTS: This material constitutes confidential trade secrets, proprietary information of SphereOptics Hoffman LLC.; the unauthorized use,dissemination or copying of this material is prohibited. This material also constitutes unpublished material protected under the provisions of the United States Copyright act. This document is to be returned upon the earlier of demand or the accomplishment of the purpose for which it was provided.

REVISIONS					
CHECKED	ECO/EV	REV.	DESCRIPTION	DATE	APPROVED

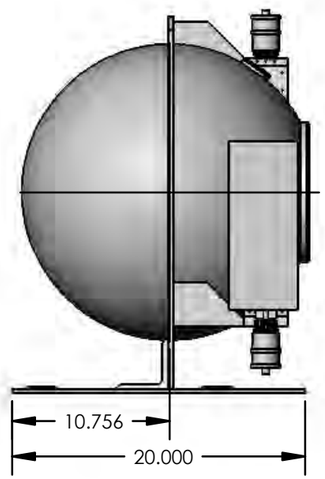

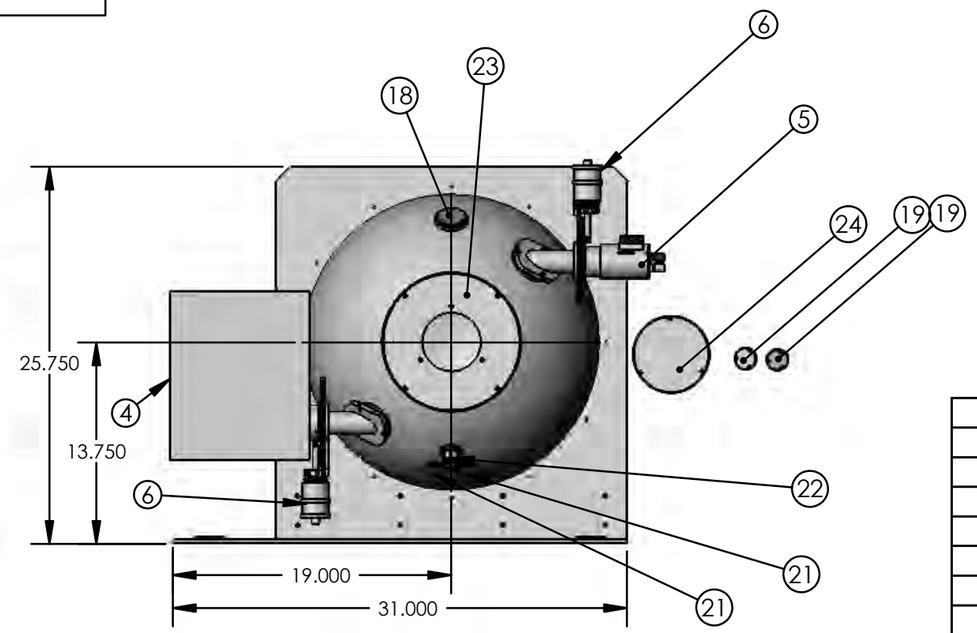

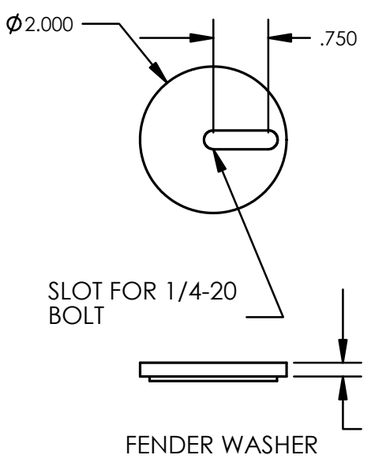

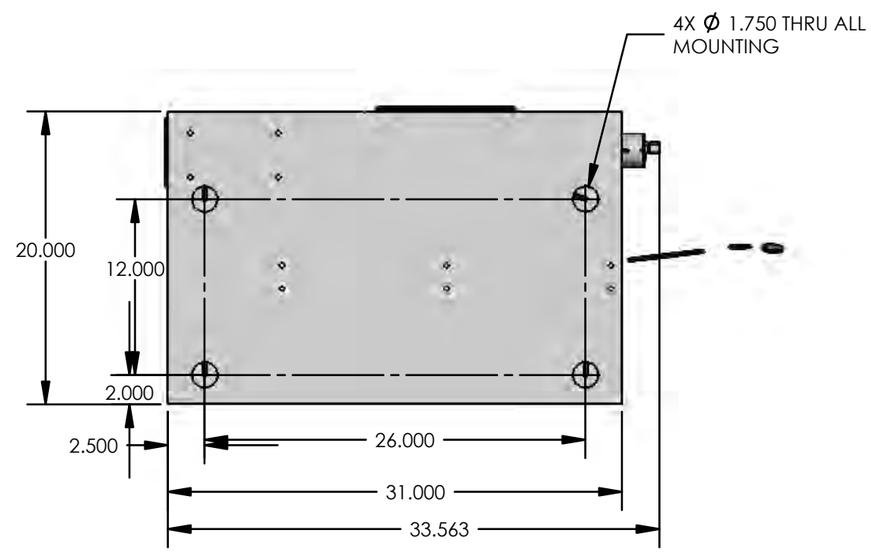

ITEM #	QTY.	PART #	DESCRIPTION
1	2	0331	20" BLANK HEMI
2	1	3326-0331	20" HEMISPHERE, SO 3326
3	1	0227	PORT, 8" SPUN
4	1	0571	FIBER OPTIC LIGHT SOURCE
5	1	ETHS-XXX	EXTERNAL LAMP ASSEMBLY (XXX W)
6	2	5181	ATTENUATOR ASSEMBLY
7	2	3326-100	PORT TUBE
8	2	0203	PORT FRAME, SPUN, 2"
9	2	3326-103	TUBE PORT
10	1	3326-101	BASE PLATE, LR SOURCE
11	1	3326-102	SPHERE PLATE, 20"
12	1	3326-104	FIBER LIGHTSOURCE MOUNT,
13	1	3326-0383-3	PORT ADAPTER, ORIEL MALE
14	2	3326-105	LOCKING BRACKET, ATT.
15	1	0528	BRACKET MOUNTING, 20"
16	3	0201	PORT, .5" SPUN
17	1	0202	PORT, 1", SPUN
18	1	0233-1	PORT PLUG, 1" OPTOWHITE
19	2	0279	PORT PLUG/ ADAPTER
20	1	0279	PORT PLUG/ ADAPTER
21	2	5109	SMA ADAPTER, .5" PORT
22	1	D5-SI-050	DETECTOR ASSEMBLY, .5" PORT
23	1	0250-2	PORT ADAPTER, 8" TO 4"
24	1	0608	PORT PLUG/ADAPTER, 4"
25	4		FENDER WASHER

UNLESS OTHERWISE SPECIFIED
DIMENSIONS ARE IN INCHES
THREE PLACE DECIMAL: ±.005
TWO PLACE DECIMAL: ±.01
FRACTIONAL: ±1/64
ANGLES: ±0°30'
SURFACE FINISH: 63 Ra
BREAK EDGES: .005-.010

MATERIAL

FINISH

DO NOT SCALE DRAWING

CAD GENERATED DRAWING, DO NOT MANUALLY UPDATE

APPROVALS	DATE
DRAWN	
APPROVED	
RESP ENG MBAYER	
MFG ENG	
QUAL ENG	

SphereOptics Hoffman LLC.
881 Main St. PO Box 669
Contoocook NH 03229

CUSTOM LR 20" SPHERE SO 3326

SIZE B | DWG. NO. SO 3326 | REV. X0

SCALE 1:10 | SHEET 1 OF 1

Path/File: